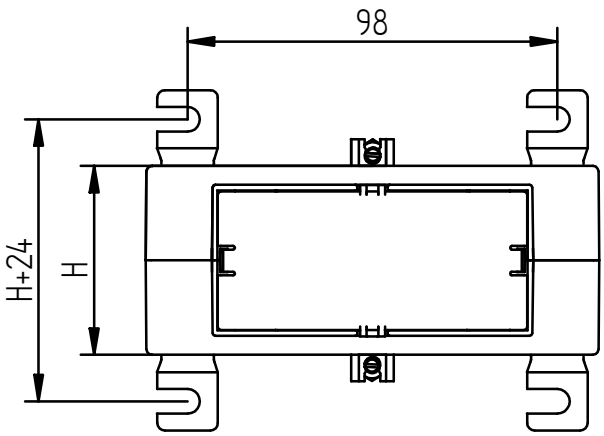

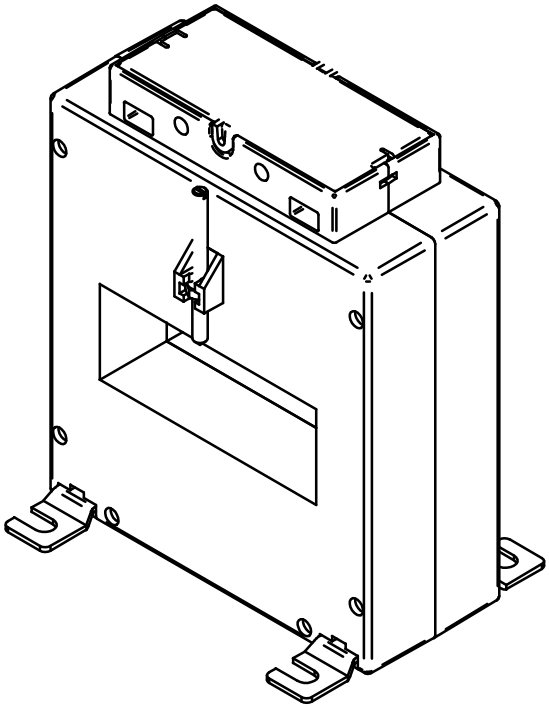

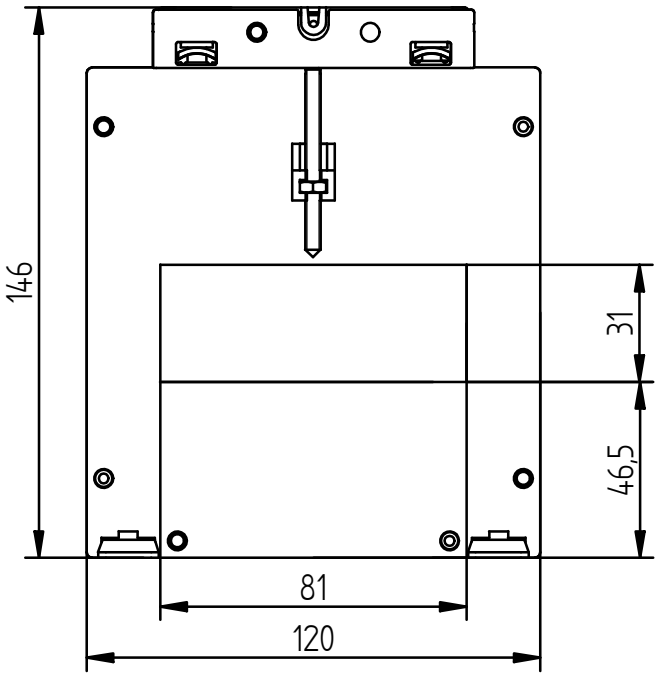

RM120-E8/2.. IA120..82	
Construction Height	H=
A	H=50
B	H=65
C	H=80

Scale:	Date	Signed	Inspection
-	23-10-2008	jsk	
Subject RM120-E8/2.. IA120..82		Drawing 463RM120-E8/2	Revision

This drawing will remain the property of Eleq. This drawing may not be copied, reproduced or made available to third parties (copyright, criminal code) without our written permission.

Faget and Kwk are businesses of Eleq